REVISION SCHEDULE				
REV. NO.	REV. DESCRIPTION	REV. DATE	DRAWN	CHECKED
PL1	ISSUED FOR PLANNING	25/03/2025	FC	DB

PROPOSED ROAD BUILD-UP
SEE DETAIL 01

PERMEABLE PARKING BAY BUILDUP:
PERMEABLE PAVING TO LANDSCAPE DETAILS ON
50 mm LAYING COURSE MATERIAL (6 mm AGGREGATE) ON
PERMEABLE TERRAM T1000 GEOTEXTILE ON
800 mm COARSE GRADED GRANULAR MATERIAL 4/20 OR 4/40 mm CLEAN WASHED STONE ON
INBITEX GEOTEXTILE MEMBRAME TO BASE AND SIDES PERMEABLE PAVING.
VARIES CLASS 6F2 CAPPING MATERIAL TO CLAUSE 613 NOTE 1 [SUBJECT TO CBR RESULTS] ON
PREPARED FORMATION WITH CBR>3% [TO BE CONFIRMED WITH ENGINEER]

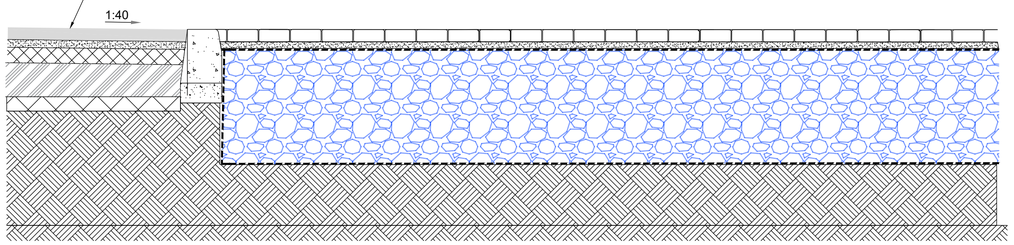

PERMEABLE PAVING DETAILS
SCALE 1:20

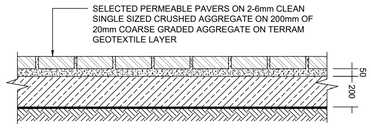

TYPICAL SECTION OF NON-TRAFFICKED PAVED AREA
SCALE 1:20

ROAD BUILDUP:
45mm SMA 14 surf PMB 65/105-60/PSV 55 ON
70mm ASPHALT CONCRETE BINDER COURSE TO CLAUSE 906 NOTE 1 [AC 20 HDM BIN 40/60 TO EN13108:1] ON
85mm ASPHALT CONCRETE BASE COURSE TO CLAUSE 906 NOTE 1 [AC 32 HDM BAS 40/60 TO EN13108:1] ON
150mm UNBOUND GRANULAR SUB-BASE TYPE B TO CLAUSE 808 NOTE 1 [MIN CBR 30%] ON
VARIES CLASS 6F2 CAPPING MATERIAL TO CLAUSE 613 NOTE 1 [SUBJECT TO CBR RESULTS] ON
PREPARED FORMATION WITH CBR>3% [TO BE CONFIRMED WITH ENGINEER]

(REFER TO TABLE 1 FOR DEPTH CAPPING LAYER)

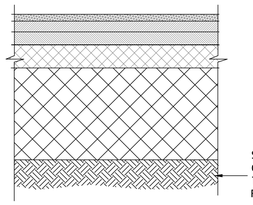

TABLE 1:

CBR(%)	DEPTH OF CAPPING
2	600
3	350
4	300
5	250
8	200

DETAIL 01 - BUILDUP OF ASPHALT ROAD
SCALE 1:20

PAVED ROAD BUILDUP:
PAVING TO ARCHITECTS DETAIL
50mm DRY SAND/CEMENT (3:1 RATIO) ON
150mm CONCRETE MIX ST3 WITH BOTTOM LAYER OF A252 MESH SAW CUT JOINTS @ 6m C/C MAX. ON
150mm UNBOUND GRANULAR SUB-BASE TYPE B TO CLAUSE 808 NOTE 1 [MIN CBR 30%] ON
VARIES CLASS 6F2 CAPPING MATERIAL TO CLAUSE 613 NOTE 1 [SUBJECT TO CBR RESULTS] ON
PREPARED FORMATION WITH CBR>3% [TO BE CONFIRMED WITH ENGINEER]

(REFER TO TABLE 1 FOR DEPTH CAPPING LAYER)

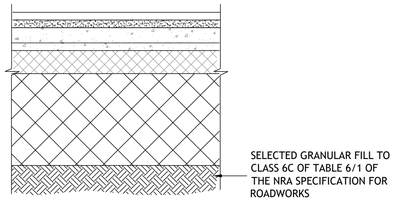

DEATIL 02 - BLOCK PAVING IN TRAFFICKED AREAS
SCALE 1:20

NOTES:

1. CLOSE GRADED SURFACE COURSE MACADAM SHALL COMPLY WITH THE REQUIREMENTS OF CLAUSE 912 OF THE NRA's 'SPECIFICATION FOR ROAD WORKS' AND SHALL SATISFY THE REQUIREMENTS OF TABLE 9/2. IT SHALL BE LAID & COMPACTED IN ACCORDANCE WITH CLAUSE 901 & CLAUSE 702

2. DENSE BITUMEN MACADAM BINDER COURSE SHALL COMPLY WITH THE REQUIREMENTS OF CLAUSE 906 OF THE NRA'S 'SPECIFICATION FOR ROAD WORKS' & SHALL SATISFY THE REQUIREMENTS OF TABLE 9/1. IT SHALL BE LAID & COMPACTED IN ACCORDANCE WITH CLAUSE 901 & CLAUSE 702.

3. SUB-BASE MATERIAL SHALL COMPLY WITH CLAUSE 808 GRANULAR MATERIAL TYPE B OF NRA's SPECIFICATION FOR ROAD WORKS (SRW) & SHALL SATISFY THE REQUIREMENTS OF TABLE 8/4 & 8/2.

4. SUB FORMATION & CAPPING MATERIAL SHALL COMPLY WITH CLAUSE 613 OF THE NRA'S 'SPECIFICATION FOR ROAD WORKS' & SHALL SATISFY THE REQUIREMENTS OF TABLE 6/1 & 6/2.

5. STONE BLINDING WITH 2-6.3mm AGGREGATE SHALL MEET THE FOLLOWING GRADINGS, IN ACCORDANCE WITH IS EN 13242
BS SIEVE SIZE (mm)% BY MASS PASSING
14 100
10 98-100
6.3 80-99
2.0 0-20
1.0 0-5

6. CRUSHED STONE WITH 4-20mm AGGREGATE SHALL MEET THE FOLLOWING GRADINGS, IN ACCORDANCE WITH IS EN 13242
BS SIEVE SIZE (mm)% BY MASS PASSING
40 100
31.5 98-100
20 90-99
10 25-70
4 0-15
5 0-5

7. ALL WORKS SHALL BE COMPLETED IN ACCORDANCE WITH THE REQUIREMENTS OF THE LOCAL AUTHORITY.

CBR TESTS:
1. CONTRACTOR TO ALLOW FOR INDIRECT CBR TESTING TO BE ARRIED OUT USING DYNAMIC CONE PENETROMETER AT 5x10m GRID UNDER THE PROPOSED ROADWAY AND AT 10x10m GRID UNDER THE PROPOSED PARKING.

2. VERTICAL ELEVATION OF STARTING LEVEL FOR EACH TEST TO BE RECORDED AND INCLUDED IN RESULT SHEETS.

3.TEST RESULTS SHOULD INLUDE CBR VALUES OBTAINED AT INTERVALS OF DEPTH IN TABLULATED FORM.

4. DEPTH OF THE TEST CARRIED OUT SHOULD NOT BE LESS THAN 1,5m. SHOULD REFUSAL BE ACHIEVED, TEST TO BE REAPEATED AT LOCATION 1m AWAY. RECORDS OF BOTH TO BE KEPT.

5. CBR TESTS TO BE CARRIED OUT BY COMPETENT SPECIALIST SUBCONTRACTOR.

NOTES:

1. ANY ROADS PORPOSED TO BE USED FOR CONSTRUCTION TRAFFIC ARE TO BE FITTED WITH PROTECTION LAYER (INCREASED DEPTH SUBBASE).

* KERB

CHECK HEIGHT TO BE 25mm AT VEHICLE ENTRANCES AND 0-6mm AT PEDESTRIAN ENTRANCES

NOTES

1. IN SITU CONCRETE KERBS SHALL COMPLY WITH THE RECOMMENDATIONS OF BS 5931
2. KERBS SHALL BE PROTECTED FROM THE EFFECTS OF ADVERSE WEATHER UNITL CURED

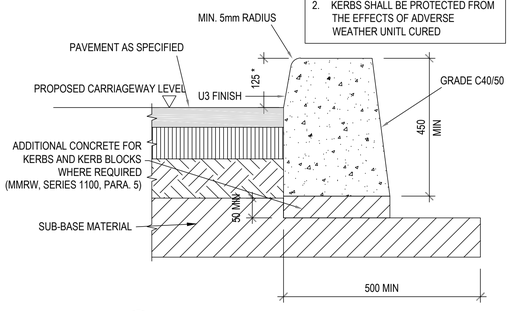

INSITU CONCRETE KERB DETAIL
SCALE 1:10

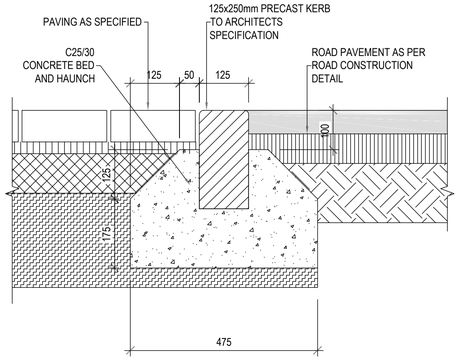

EDGE KERB DETAIL (DBM TO PAVING BLOCK)
SCALE 1:10

NOTES

1. IN SITU CONCRETE KERBS SHALL COMPLY WITH THE RECOMMENDATIONS OF BS 5931
2. KERBS SHALL BE PROTECTED FROM THE EFFECTS OF ADVERSE WEATHER UNITL CURED

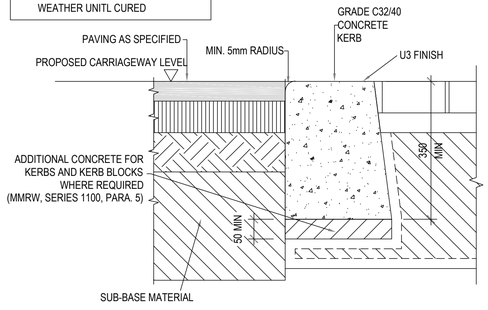

FLUSH KERB DETAIL
SCALE 1:10

NOTES

1. ALL DIMENSIONS ARE IN MILLIMETERS
2. PRECAST KERBS SHALL BE LAID AND LEVELLED IN ACCORDANCE WITH B.S. 7263 : PART2

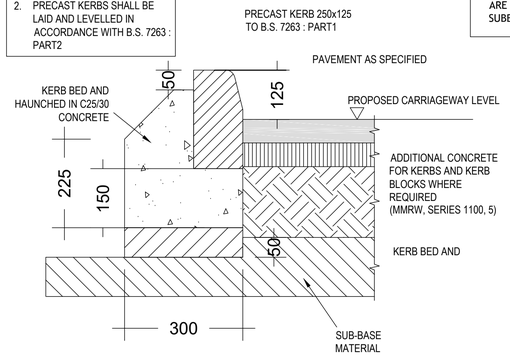

PRECAST KERB DETAIL
SCALE 1:10

Drawing Stage:	Project Details:	
PLANNING	Site Address:	RATHFARNHAM CASTLE, D14 K3T6.
	Client:	SOUTH DUBLIN COUNTY COUNCIL
	Architect:	HHC ARCHITECTS
	M&E Designer:	HORMAN O'BRIEN
	Contractor:	

Notes

Drawn by:	Checked by:	Approved by:	Date:
FC	DB	LE	25/03/2025

Project Name: RATHFARNHAM CASTLE COURTYARD
Scale: A.S @ A1
Project Number: 2332
Drawing Title: ROAD DETAILS

Project:	Originator:	Zone:	Level:	Type:	Discipline:	Drawing No:	Stage:	Revision:
RCC	CORA	ZZ	ZZZ	DR	C	0016	01	PL1

CORA CONSULTING ENGINEERS
Behan House,
10 Lower Mount Street,
Dublin 2. D02 HT71
Tel: +353 1 661 1100
e-mail: info@cora.ie
Web: www.cora.ie