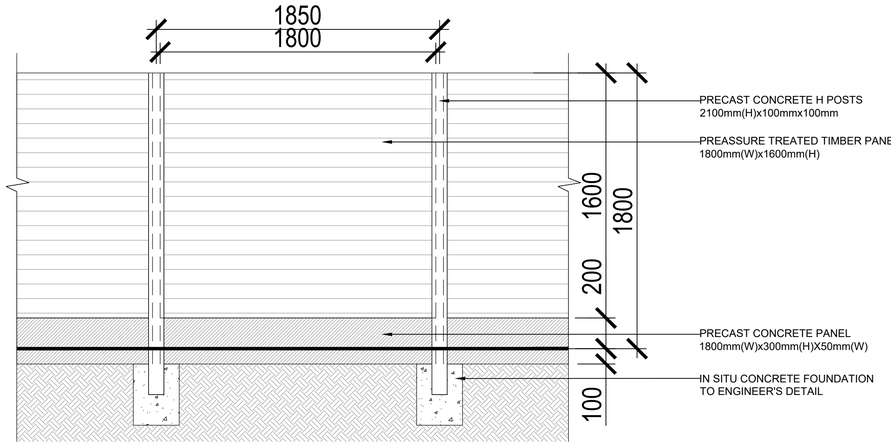

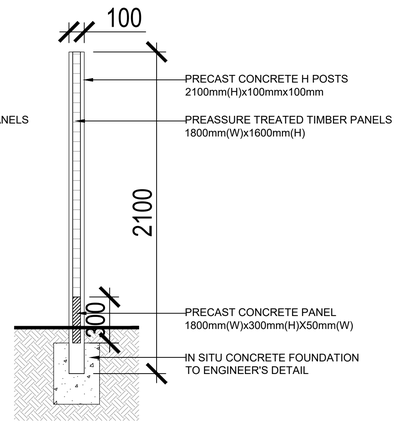

01 | 1.8M HIGH POST AND PANEL FENCE

1:20 @ A1

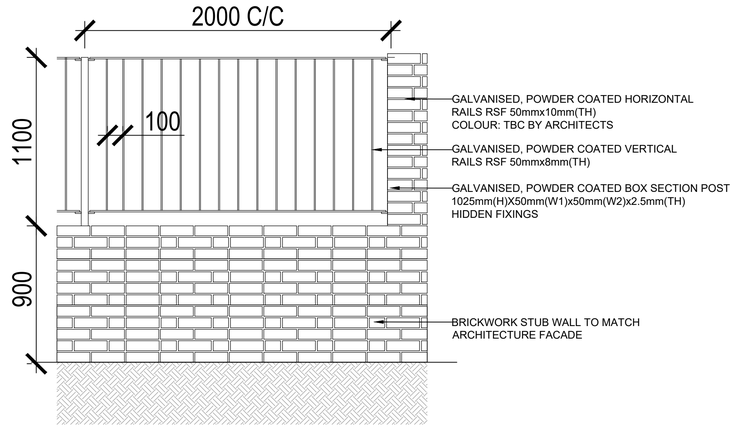

02 | 2M BRICK WALL AND RAILING (Community Gardens)

1:20 @ A1

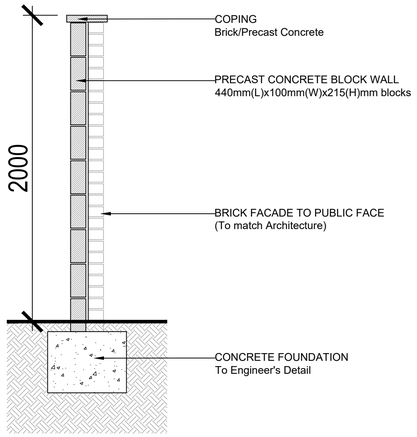

SECTION

03 | 2M HIGH BLOCKWORK WALL WITH BRICK PUBLIC FACADE

1:20 @ A1

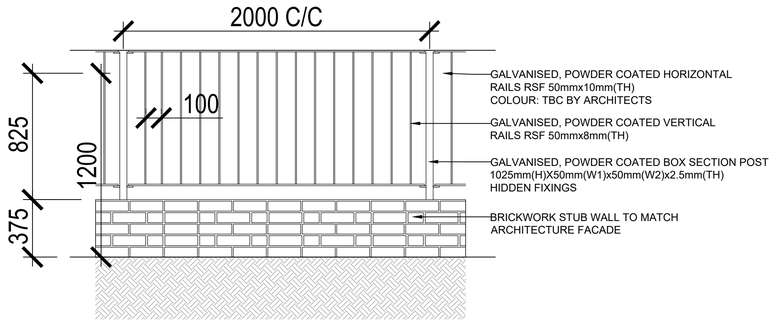

SECTION

04 | 1.35M STUB WALL AND RAILING

1:20 @ A1

REFERENCE IMAGE

PLEASE REFER TO BOUNDARY FIGURE IN LANDSCAPE REPORT FOR REFERENCE OF BOUNDARY PROPOSALS.

DETAILS TO BE REFINED AT DETAILED DESIGN FOLLOWING CO-ORDINATION AND SIGN OFF WITH SOUTH DUBLIN COUNTY COUNCIL

ISSUE/REVISION

I/R	DATE	DESCRIPTION
01	15/04/2022	PART 8 PLANNING

0 0.5 1 m

1:20 @A1

PROJECT NUMBER

60650394

SHEET TITLE

LANDSCAPE DETAIL 6/6

SHEET NUMBER

CLBR-ACM-00-SHT-20-L-7005

PROJECT

CLONBURRIS
PHASE 1
SDZ

CLIENT

Comhairle Contae Átha Cliath Theas
South Dublin County Council

CONSULTANT

AECOM Ireland Limited
24 Lower Hatch Street
Dublin 2, D02 TY88
01 676 3671 tel
www.aecom.com/ie

ISO A1 594mm x 841mm
Approved: ED FRAMPTON
Checked:KIERAN CULLETON
Designer: EIMEAR McDONNELL
Project Management Initials:
Last saved by: CRAIG.SWEENEY(2022-04-14) Last Plotted: 2022-04-15
Filename: \\NA.AECOMNET.COM\LFS\EMEA\DUBLIN-HEDBL2\LEGACY\EDBL2FP001\DATA\DCS\PROJECTS\BP\60650394_SDCC_CLONBURRIS\900_CAD_GIS\906_LA\02_SHEETS\STAGE 2\CLBRS-SHT-20-L-7000.DWG

Printed on ____% Post-Consumer Recycled Content Paper